HCD

Small diameter wall mounted axial fans



Wall mounted axial fans with aluminum sheet impeller, shading coil motors and built-in connection cable.

Fan:
- Steel sheet support frame.
- Aluminium sheet impeller.
- Protection grid against contacts according to UNE-EN ISO 12499.
- Airflow direction from motor to impeller.

Motor:
- Class B motors with self-lubricating friction bearings, IP44 protection, except for model 40 equipped with a class F motor with ball bearings and IP54 protection.
- Single-phase 230 V 50 Hz.
- Working temperature: -10 ºC +50 ºC.

Finish:
- Anti-corrosive finish in polyester resin, polymerised at 190 ºC, after degreasing with phosphate-free nanotechnology treatment.

On request:
- Special windings for different voltages.

Order code

HCD	—	20	—	4	M
HCD: Small diameter wall mounted axial fans		Impeller diameter in cm		Number of motor poles 4=1500 r/min 50 Hz	M = Single-phase

Technical characteristics

Model	Speed	Maximum admissible current (A)	Max. electric power	Maximum flow rate	Sound pressure level[1] dB(A)	Approx. weight
	(r/min)	230V	(kW)	(m^3/h)	Inlet	(Kg)
HCD-20-4M	1350	0.21	0.04	560	35	1
HCD-25-4M	1340	0.25	0.04	960	40	2
HCD-30-4M	1360	0.51	0.09	1340	45	2
HCD-35-4M	1365	0.80	0.13	1825	50	6
HCD-40-4M	1410	1.00	0.18	3145	54	7

1. The noise level values are pressures in dB(A) measured at a distance of 3 metres in a free field.

Erp. (Energy Related Products)

Information on Directive 2009/125/EC can be downloaded from the SODECA website or the QuickFan selector programme.

Acoustic characteristics

The values given are obtained under laboratory conditions according to ISO 3744.

Sound power spectrum Lw(A) in dB(A) per Hz frequency band

Values measured at inlet with maximum flow rate

	63	125	250	500	1000	2000	4000	8000
HCD-20-4M	18	28	45	45	53	49	42	33
HCD-25-4M	23	33	50	50	58	54	47	38
HCD-30-4M	28	38	55	55	63	59	52	43

	63	125	250	500	1000	2000	4000	8000
HCD-35-4M	33	43	60	60	68	64	57	48
HCD-40-4M	28	45	57	65	70	70	66	59

Dimensions mm

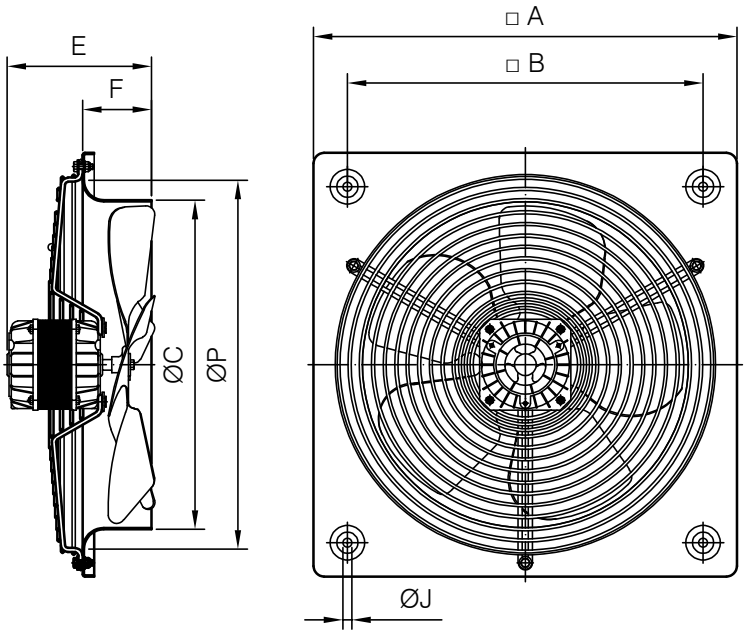

	A	B	C	E	F	J	P
HCD-20	266	222	208	101	34	9	236
HCD-25	330	275	262	125	56	8.5	290
HCD-30	400	336	310	136	65	8.5	348
HCD-35	465	390	362	140	76	10.5	410
HCD-40	532	452	412	281	97.5	10.5	460

Characteristic curves

Q= Flow rate in m³/h, m³/s and cfm Pe= Static pressure in mm H_2O, Pa and inwg

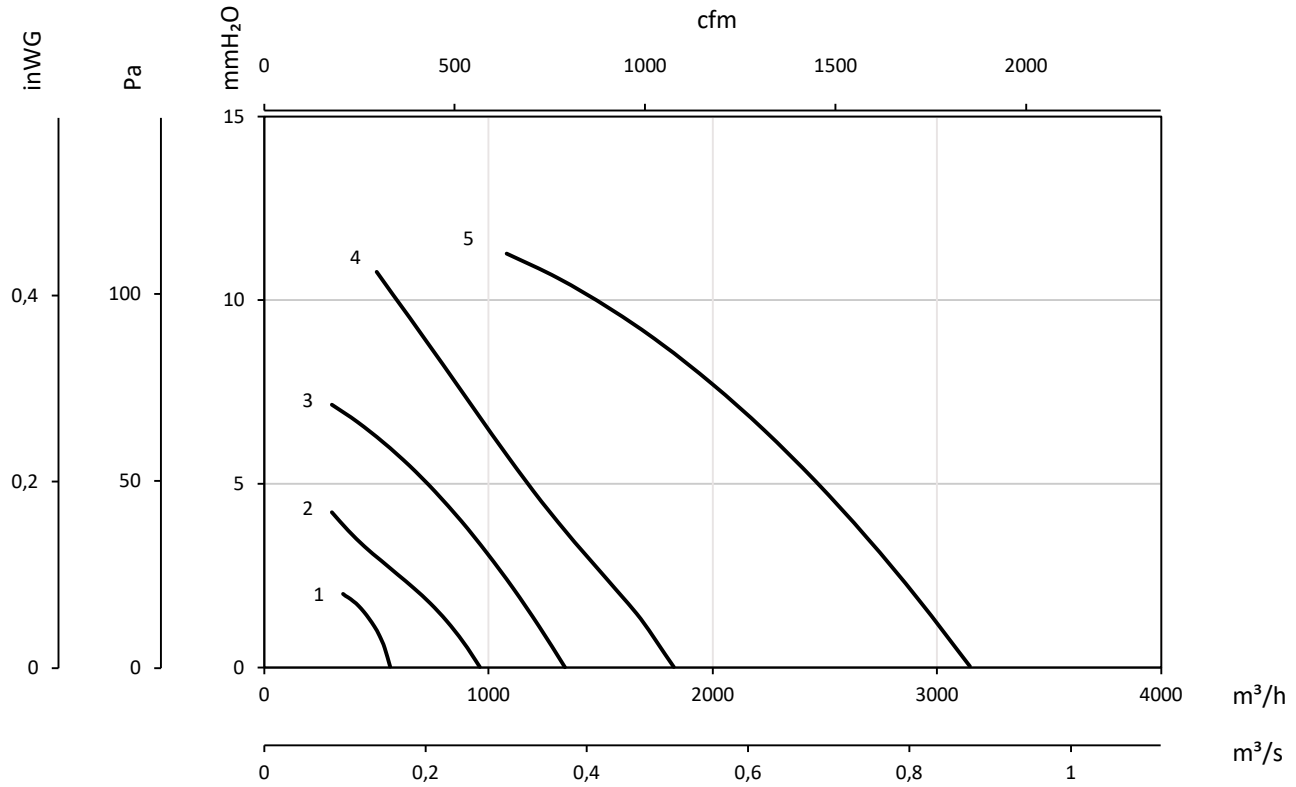

1 : HCD-20-4M
2 : HCD-25-4M
3 : HCD-30-4M

4 : HCD-35-4M
5 : HCD-40-4M

Accessories


INT


RM


PL


P


RI